THERMA-TRU® DOORS

Classic-Craft®

GLAZED FIBERGLASS SINGLE DOOR

INSWING/OUTSWING "NON-IMPACT"

GENERAL NOTES

1. This product has been evaluated and is in compliance with the 8th Edition (2023) Florida Building Code (FBC) structural requirements excluding the "High Velocity Hurricane Zone" (HVHZ).
2. Product anchors shall be as listed and spaced as shown on details. Anchor embedment to base material shall be beyond wall dressing or stucco.
3. When used in areas requiring wind borne debris protection, this product is required to be protected with an impact resistant covering that complies with FBC Sections 1609.1.2 & R301.2.1.2.
4. For 2x stud framing construction, anchoring of these units shall be the same as that shown for 2x buck masonry construction.
5. Site conditions that deviate from the details of this drawing require further engineering analysis by a licensed engineer or registered architect.

TABLE OF CONTENTS

SHEET#	DESCRIPTION
1	Typical Elevations, Design Pressures & General Notes
2	Door Panel Details (Lite Frame Glazing)
3	Door Panel Flush Glazing Details
4	Lite Frame Glazing Details
5	Elevations
6	Horizontal & Vertical Cross Sections (2X Buck)
7	Horizontal & Vertical Cross Sections (1X Buck)
8	Horizontal & Vertical Cross Sections (Direct to Masonry)
9	Vertical Cross Sections (Thresholds)
10	Buck & Frame Anchoring & Hardware Details
11	Components
12	Components & Bill of Materials

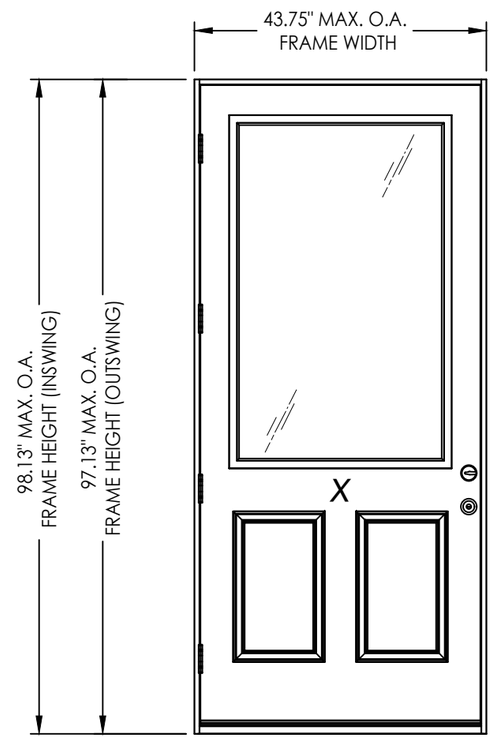

CONFIGURATION	Lock Hardware	DESIGN PRESSURE (PSF) INSWING		DESIGN PRESSURE (PSF) OUTSWING	
		POSITIVE	NEGATIVE	POSITIVE	NEGATIVE
X	Kwikset*	+60.0	-70.0	+60.0	-60.0
X	Schlage*	+60.0	-70.0	+60.0	-60.0

See Sheet 5 for Hardware Specifications

L F Schmidt

L. F. SCHMIDT LICENSE No. 43409 STATE OF FLORIDA PROFESSIONAL ENGINEER

Digitally signed by Lyndon F Schmidt
Date: 2023.08.29 09:40:38 -04'00'

This item has been digitally signed and sealed by **L. F. Schmidt, P.E.** on the date adjacent to the seal. Printed copies of this document are not considered signed and sealed and the signature must be verified on any electronic copies.

THIS PRODUCT APPROVAL IS VALID ONLY FOR THE STATE OF FLORIDA

Documents Prepared By:
Lyndon F. Schmidt
P.E. No. 43409
RW BUILDING CONSULTANTS, INC.
P.O. Box 230, Valrico, FL 33595
Phone No.: 813.659.9197
FBPE Registry No. 9813

PRODUCT: THERMA-TRU FIBERGLASS DOOR

PART OR ASSEMBLY: TYPICAL ELEVATION, DESIGN PRESSURES & GENERAL NOTES

NO.	DATE	REVISIONS	BY
2	8/22/23	UPDATE TO 8TH ED. (2023) FBC	LFS
1	8/05/20	UPDATE TO 7th ED (2020) FBC	LFS

DATE: 3/24/20
SCALE: N.T.S.
DWG. BY: RW
CHK. BY: LFS
DRAWING NO.: FL-23955.19
SHEET 1 OF 12

© 2020 R.W. BUILDING CONSULTANTS INC.

Z:\2023 FBC Drawings\Therma-Tru\FL-23955 R3\FL-23955.19-20.dwg

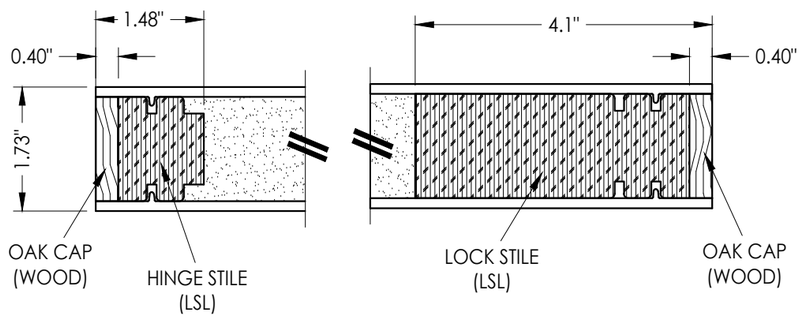

1/2 **HORIZONTAL CROSS SECTION**

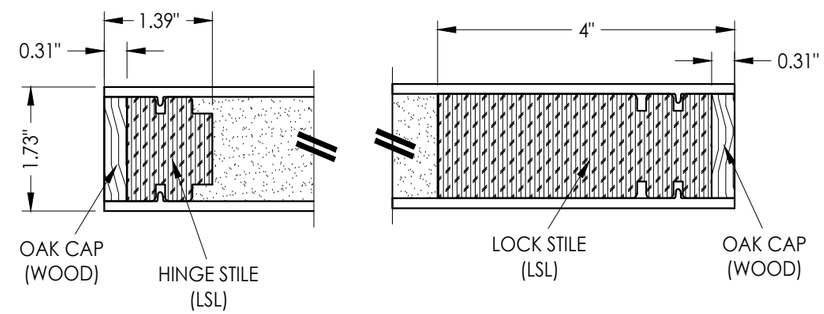

2/2 **HORIZONTAL CROSS SECTION**

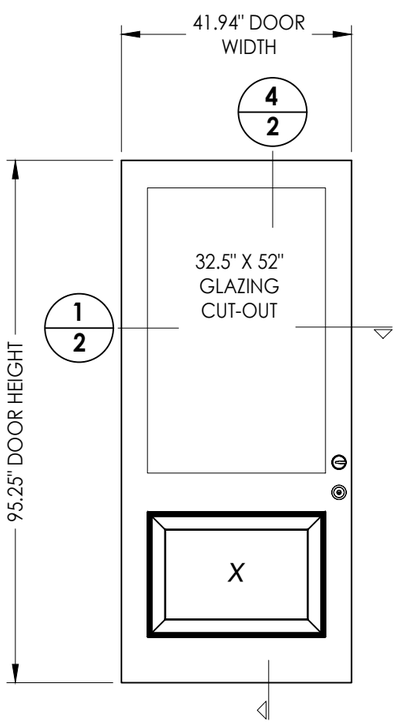

40 **DOOR PANEL**
Book Door

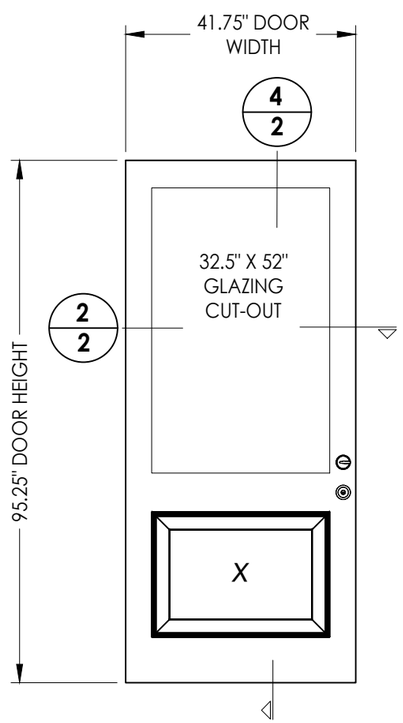

41 **DOOR PANEL**
Hybrid Door

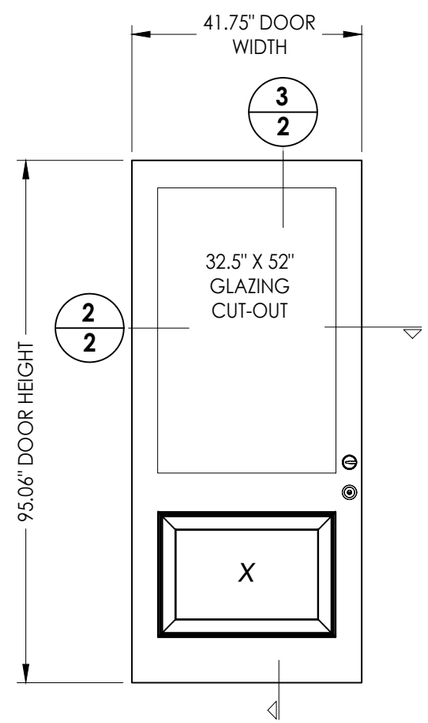

42 **DOOR PANEL**
U1 Door

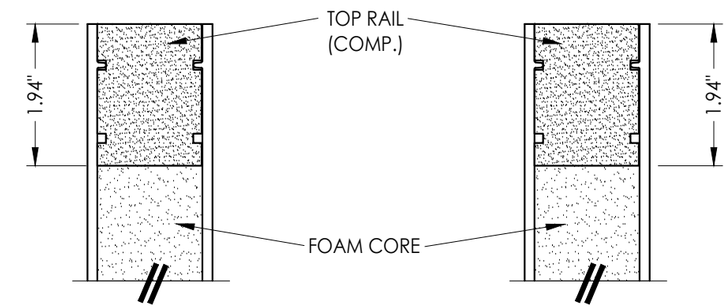

3/2 **VERTICAL CROSS SECTION**

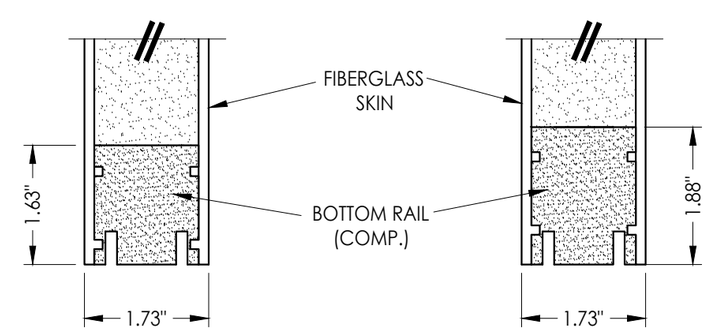

4/2 **VERTICAL CROSS SECTION**

"Classic-Craft" SERIES DOOR PANEL

FIBERGLASS DOOR SKIN: 0.125" MIN. THK.
FOAM CORE: POLYURETHANE FOAM (1.9 PCF MIN.)

Documents Prepared By:
Lyndon F. Schmidt
P.E. No. 43409

RW BUILDING CONSULTANTS, INC.
P.O. Box 230, Valrico, FL 33595
Phone No.: 813.659.9197
FBPE Registry No. 9813

PRODUCT: THERMA-TRU FIBERGLASS DOOR

PART OR ASSEMBLY: DOOR PANEL DETAILS (LITE FRAME GLAZING)

REVISIONS

NO.	DATE	BY
2	8/22/23 UPDATE TO 8TH ED. (2023) FBC	LFS
1	8/05/20 UPDATE TO 7th ED (2020) FBC	LFS

DATE: 3/24/20
SCALE: N.T.S.
DWG. BY: RW
CHK. BY: LFS
DRAWING NO.: FL-23955.19
SHEET 2 OF 12

© 2020 R.W. BUILDING CONSULTANTS INC.

Z:\2023 FBC Drawings\Therma-Tru\FL-23955 R3\FL-23955.19-20.dwg

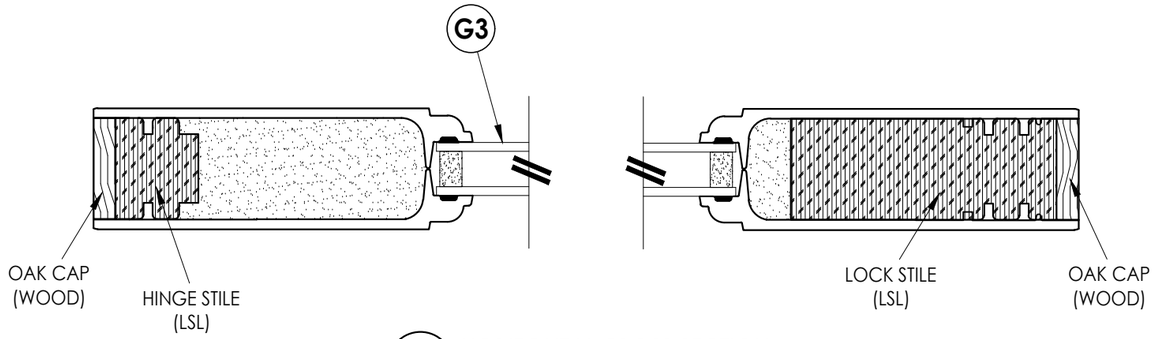

1/3 **HORIZONTAL CROSS SECTION**

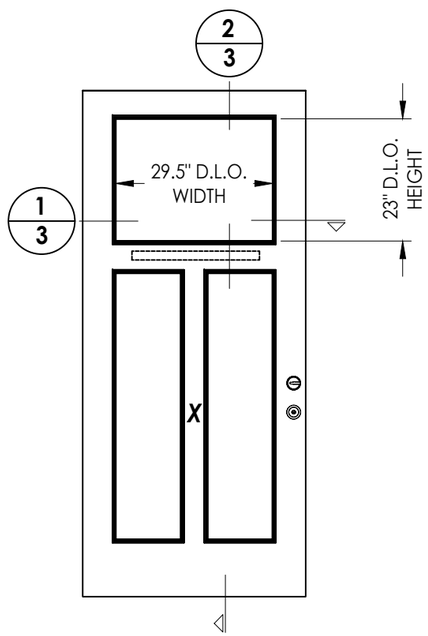

FLUSH GLAZED DOOR PANEL
SEE SHEET 2 FOR PANEL DETAILS

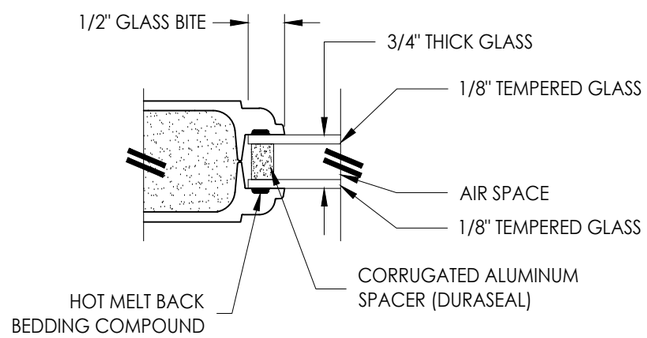

G3 **GLAZING DETAIL**
FLUSH GLAZED

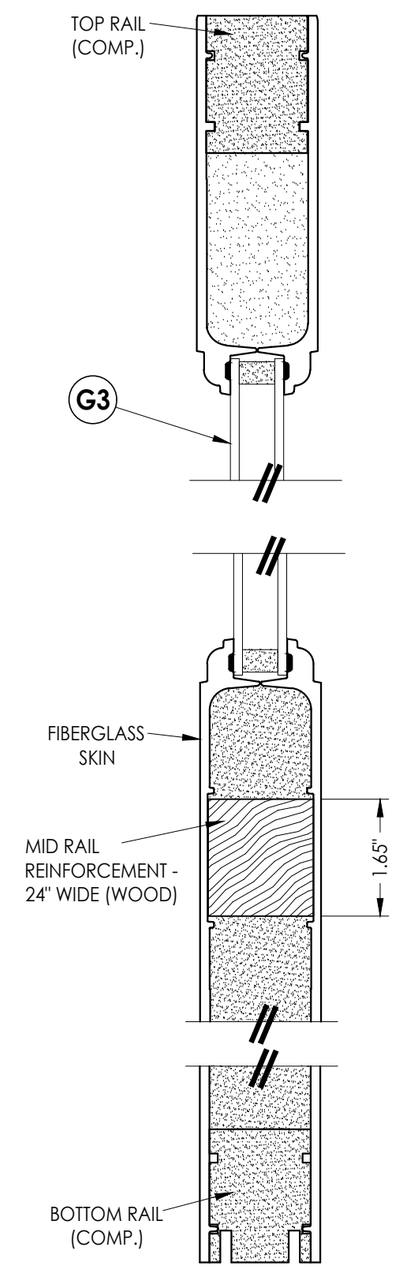

2/3 **VERTICAL CROSS SECTION**

"Classic-Craft" SERIES DOOR PANEL
FIBERGLASS DOOR SKIN: 0.125" MIN. THK.
FOAM CORE: POLYURETHANE FOAM (1.9 PCF MIN.)

Documents Prepared By:
Lyndon F. Schmidt
P.E. No. 43409
RW BUILDING CONSULTANTS, INC.
P.O. Box 230, Valrico, FL 33595
Phone No.: 813.659.9197
FBPE Registry No. 9813

PRODUCT: THERMA-TRU FIBERGLASS DOOR

PART OR ASSEMBLY: DOOR PANEL FLUSH GLAZING DETAILS

NO.	DATE	REVISIONS	BY
2	8/22/23	UPDATE TO 8TH ED. (2023) FBC	LFS
1	8/05/20	UPDATE TO 7th ED (2020) FBC	LFS

DATE: 3/24/20
SCALE: N.T.S.
DWG. BY: RW
CHK. BY: LFS
DRAWING NO.: FL-23955.19
SHEET 3 OF 12

© 2020 R.W. Building Consultants Inc.

Z:\2023 FBC Drawings\Therma-Tru\FL-23955 R3\FL-23955.19-20.dwg

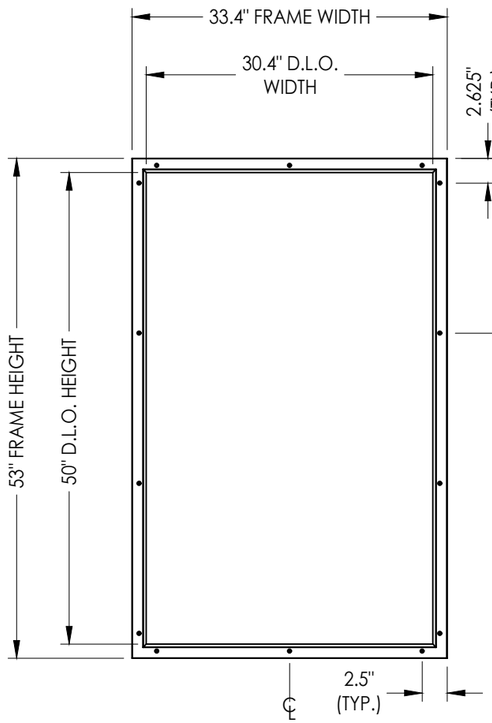

ALUMINUM LITE FRAME

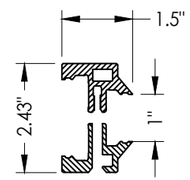

ALUMINUM LITE FRAME

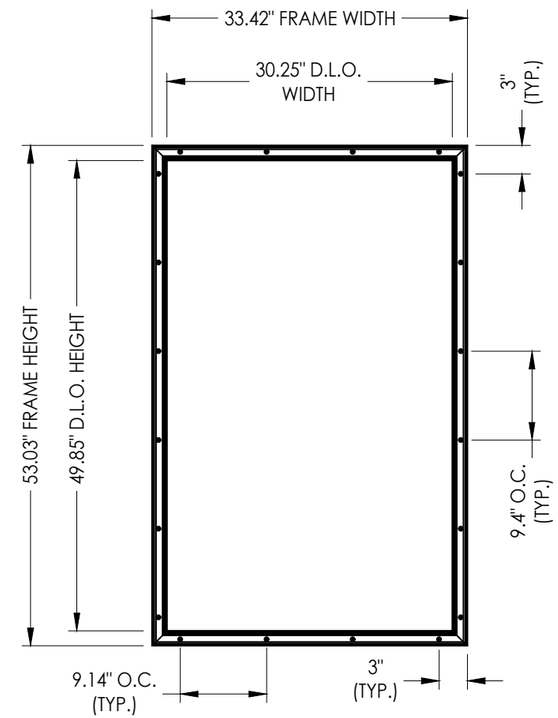

SMC LITE FRAME

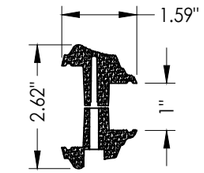

SMC LITE FRAME

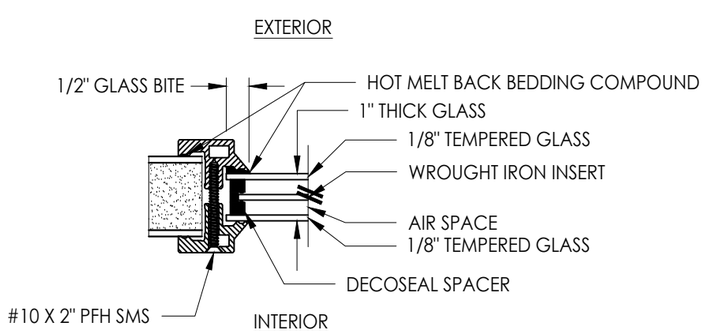

G1 ***GLAZING DETAIL***

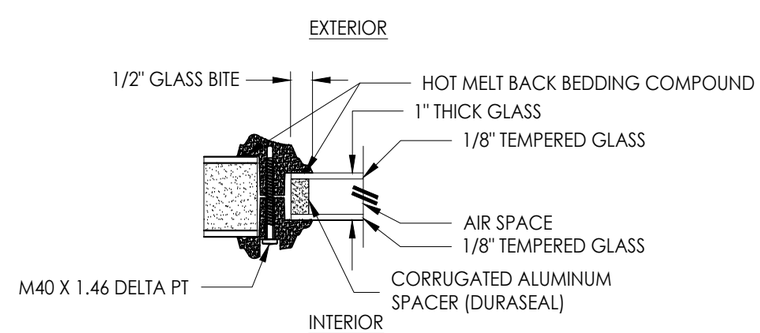

G2 ***GLAZING DETAIL***

Documents Prepared By:
Lyndon F. Schmidt
P.E. No. 43409

RW BUILDING CONSULTANTS, INC.
P.O. Box 230, Valrico, FL 33595
Phone No.: 813.659.9197
FBPE Registry No. 9813

PRODUCT: *THERMA-TRU FIBERGLASS DOOR*

PART OR ASSEMBLY: *LITE FRAME GLAZING DETAILS*

REVISIONS

NO.	DATE		BY
1	8/05/20	UPDATE TO 7th ED (2020) FBC	LFS
2	8/22/23	UPDATE TO 8TH ED. (2023) FBC	LFS

DATE: 3/24/20
SCALE: N.T.S.
DWG. BY: RW
CHK. BY: LFS
DRAWING NO.: FL-23955.19
SHEET 4 OF 12

© 2020 R.W. Building Consultants Inc.

Z:\2023 FBC Drawings\Therma-Tru\FL-23955 R3\FL-23955.19-20.dwg

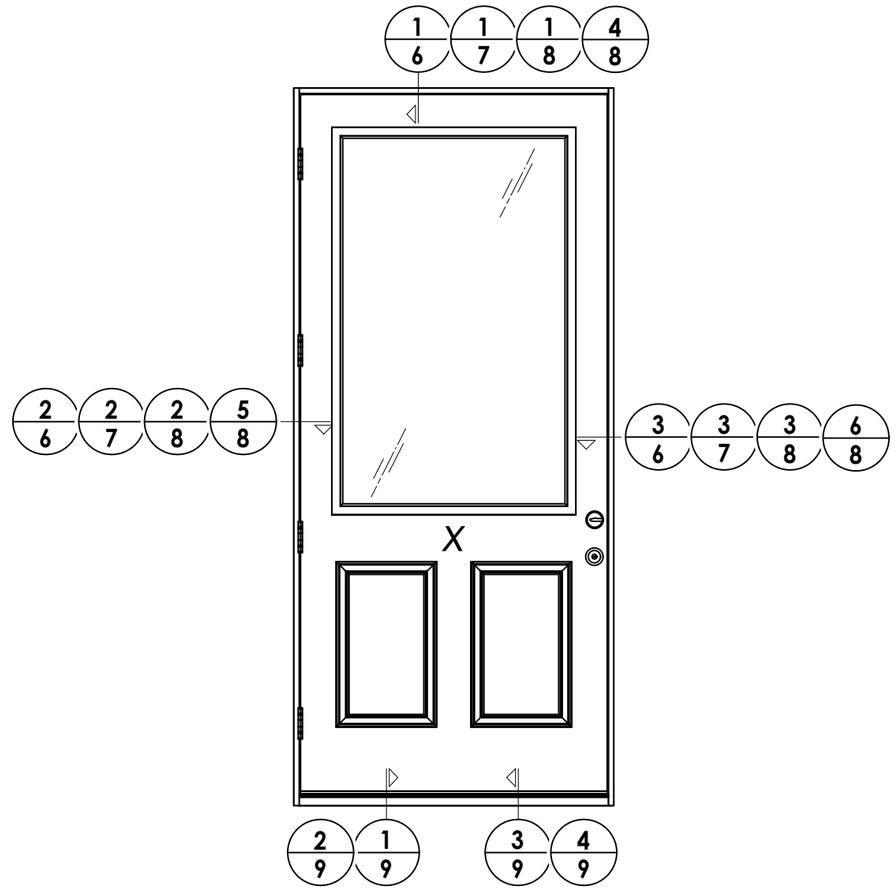

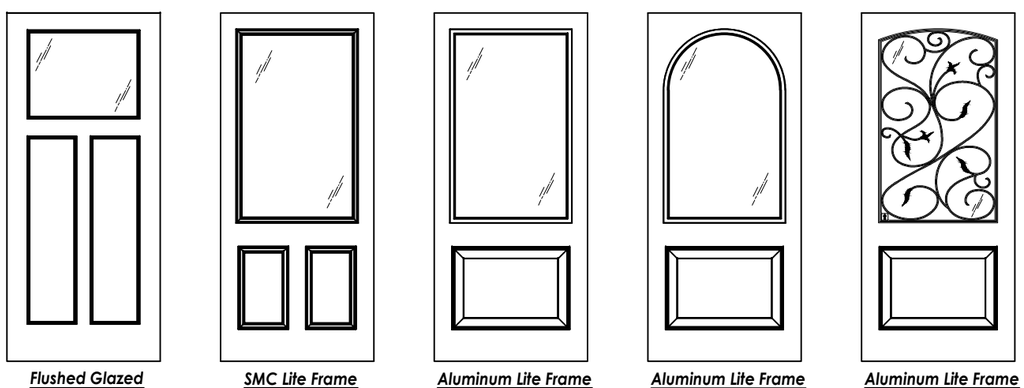

Flushed Glazed
Rectangular

SMC Lite Frame
Rectangular

Aluminum Lite Frame
Rectangular

Aluminum Lite Frame
Round Top

Aluminum Lite Frame
Arch Top w/ Wrought Iron Insert

Classic-Craft Door Panel Options

Panel options shown are for illustration and are representative only
(similar opaque panel configurations are allowed, see glazing details for glazed panel limitations)

HARDWARE TABLE		
MANUFACTURER	***MODEL***	
SCHLAGE	**KNOB:** **DEADBOLT:**	**F51** **B60N**
KWIKSET	**KNOB:** **DEADBOLT:**	**SIGNATURE SERIES** **SIGNATURE SERIES (980)**

Documents Prepared By:
Lyndon F. Schmidt
P.E. No. 43409
RW BUILDING CONSULTANTS, INC.
P.O. Box 230, Valrico, FL 33595
Phone No.: 813.659.9197
FBPE Registry No. 9813

PRODUCT: *THERMA-TRU FIBERGLASS DOOR*

PART OR ASSEMBLY: *ELEVATIONS*

REVISIONS

NO.	DATE		BY
2	8/22/23	UPDATE TO 8TH ED. (2023) FBC	LFS
1	8/05/20	UPDATE TO 7th ED (2020) FBC	LFS

DATE: 3/24/20
SCALE: N.T.S.
DWG. BY: RW
CHK. BY: LFS
DRAWING NO.: FL-23955.19
SHEET 5 OF 12

© 2020 R.W. BUILDING CONSULTANTS INC.

Z:\2023 FBC Drawings\Therma-Tru\FL-23955 R3\FL-23955.19-20.dwg

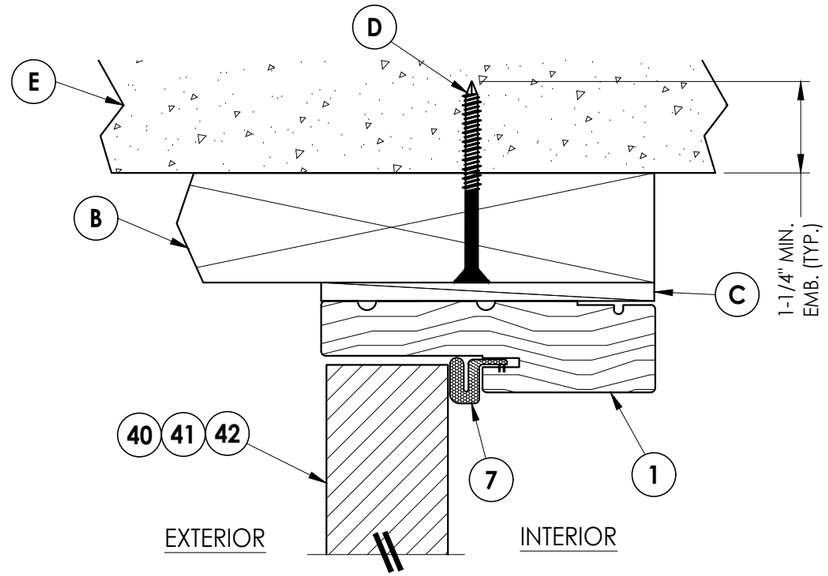

1/6 ***VERTICAL CROSS SECTION***
Shown w/ 2X Buck
Outswing shown (Inswing similar)

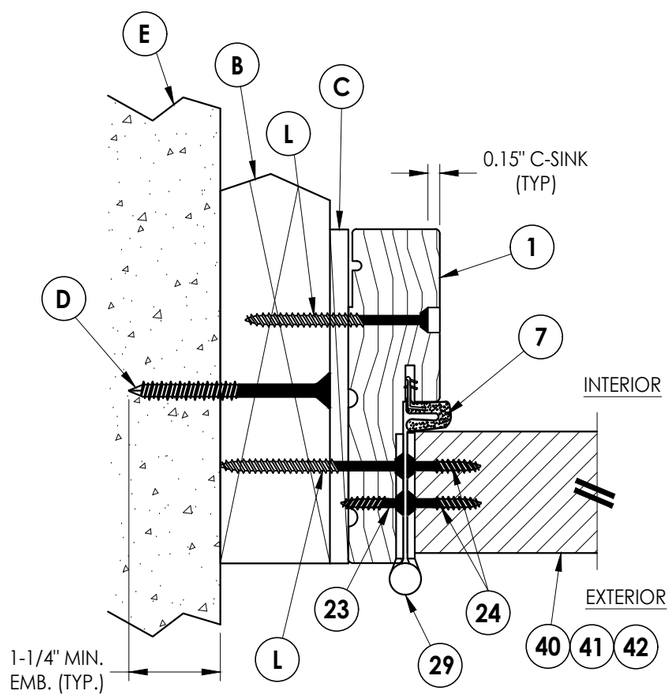

2/6 ***HORIZONTAL CROSS SECTION***
Shown w/ 2X Buck
Outswing shown (Inswing similar)

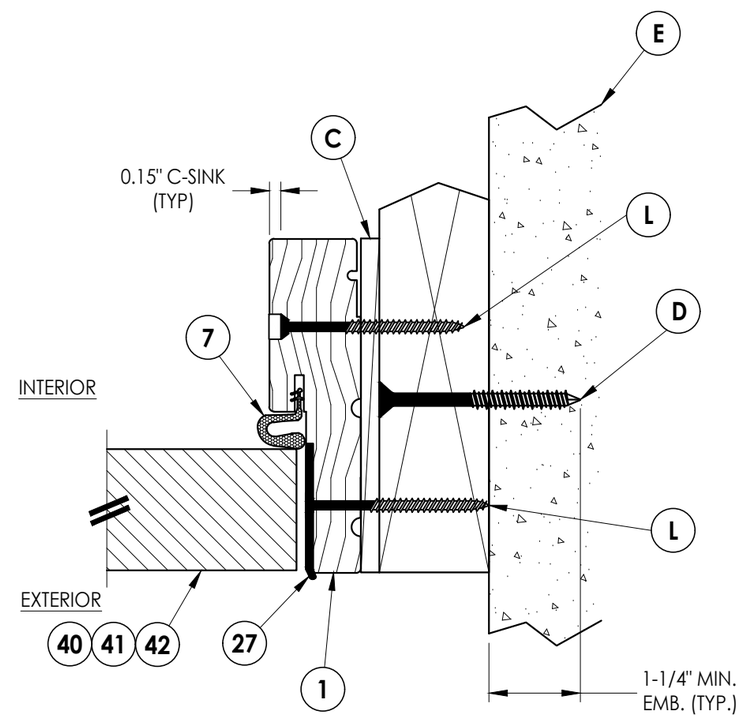

3/6 ***HORIZONTAL CROSS SECTION***
Shown w/ 2X Buck
Outswing shown (Inswing similar)

Documents Prepared By:
Lyndon F. Schmidt
P.E. No. 43409

RW BUILDING CONSULTANTS, INC.
P.O. Box 230, Valrico, FL 33595
Phone No.: 813.659.9197
FBPE Registry No. 9813

PRODUCT: *THERMA–TRU FIBERGLASS DOOR*

PART OR ASSEMBLY: *HORIZONTAL & VERTICAL CROSS SECTIONS (2X BUCK)*

REVISIONS

NO.	DATE		BY
2	8/22/23	UPDATE TO 8TH ED. (2023) FBC	LFS
1	8/05/20	UPDATE TO 7th ED (2020) FBC	LFS

DATE: 3/24/20
SCALE: N.T.S.
DWG. BY: RW
CHK. BY: LFS
DRAWING NO.: FL–23955.19
SHEET 6 OF 12

© 2020 R.W. Building Consultants Inc.

Z:\2023 FBC Drawings\Therma-Tru\FL-23955 R3\FL-23955.19-20.dwg

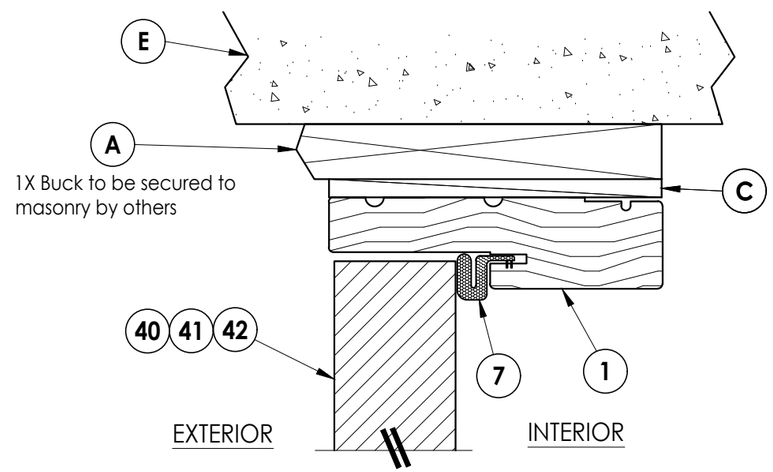

1/7 **VERTICAL CROSS SECTION**
Shown w/ 1X sub-buck
Outswing shown (Inswing similar)

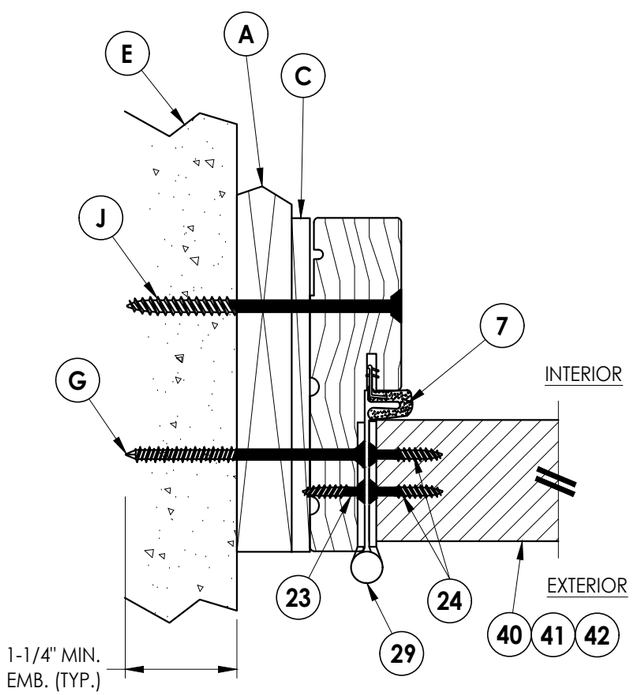

2/7 **HORIZONTAL CROSS SECTION**
Shown w/ 1X sub-buck
Outswing shown (Inswing similar)

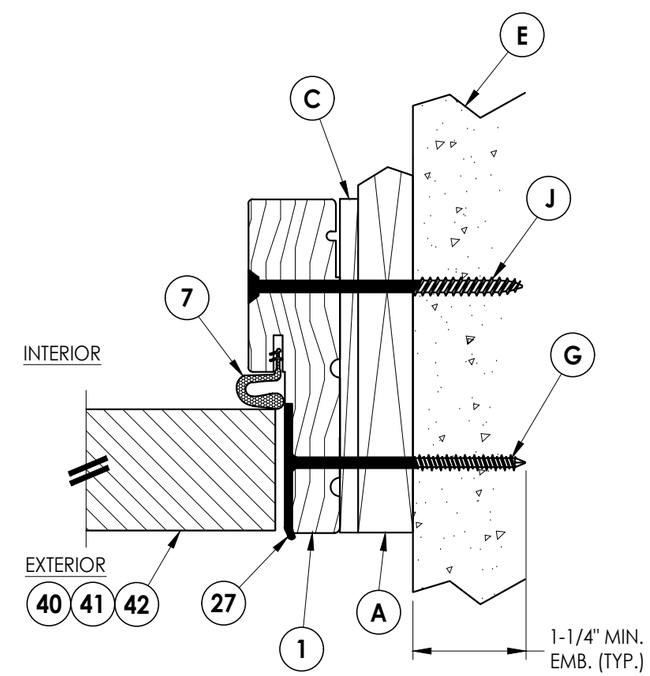

3/7 **HORIZONTAL CROSS SECTION**
Shown w/ 1X sub-buck
Outswing shown (Inswing similar)

Documents Prepared By:
Lyndon F. Schmidt
P.E. No. 43409

RW BUILDING CONSULTANTS, INC.
P.O. Box 230, Valrico, FL 33595
Phone No.: 813.659.9197
FBPE Registry No. 9813

PRODUCT: THERMA-TRU FIBERGLASS DOOR

PART OR ASSEMBLY: HORIZONTAL & VERTICAL CROSS SECTIONS (1X BUCK)

NO.	DATE	REVISIONS	BY
2	8/22/23	UPDATE TO 8TH ED. (2023) FBC	LFS
1	8/05/20	UPDATE TO 7th ED (2020) FBC	LFS

DATE: 3/24/20
SCALE: N.T.S.
DWG. BY: RW
CHK. BY: LFS
DRAWING NO.: FL-23955.19
SHEET 7 OF 12

© 2020 R.W. Building Consultants Inc.

Z:\2023 FBC Drawings\Therma-Tru\FL-23955 R3\FL-23955.19-20.dwg

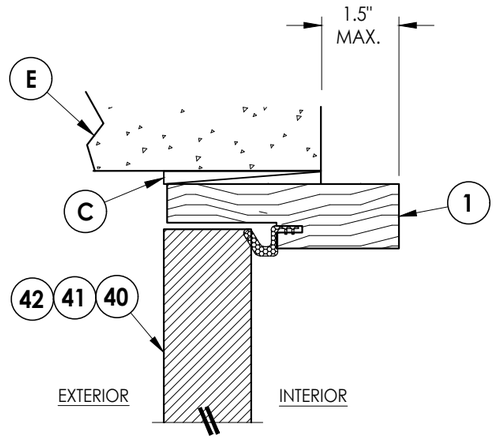

1/8 VERTICAL CROSS SECTION
Shown Direct to Masonry
Outswing only w/ 4-9/16" jamb

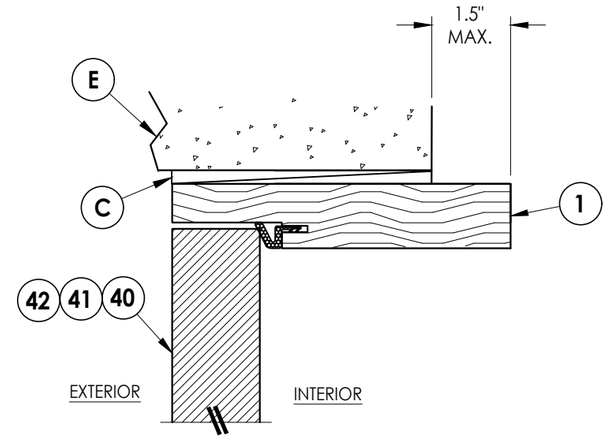

4/8 VERTICAL CROSS SECTION
Shown Direct to Masonry
Outswing only w/ 6-9/16" jamb

DIRECT TO MASONRY MAX. DESIGN PRESSURE:
± 40 PSF

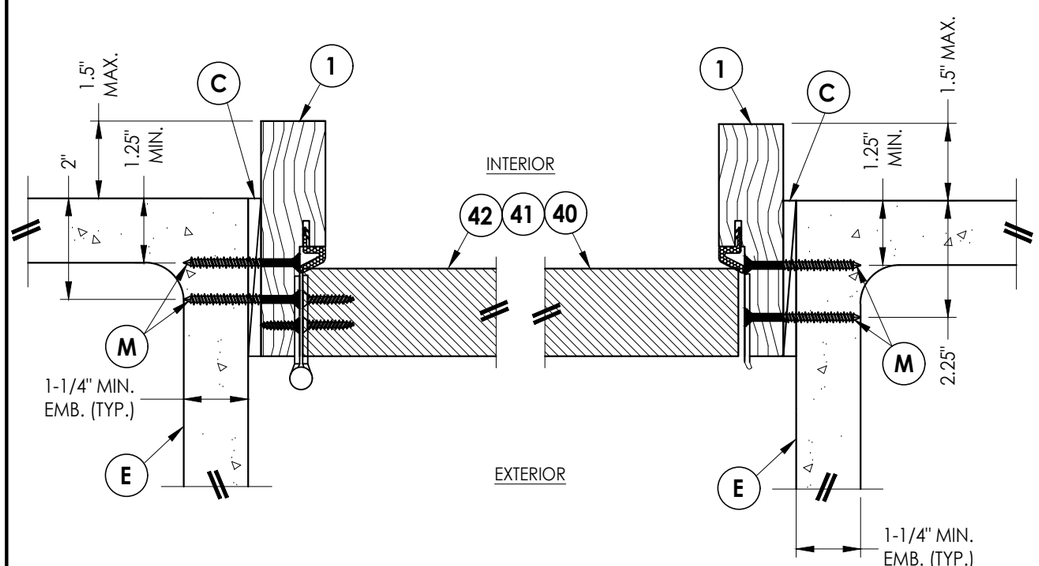

2/8 HORIZONTAL CROSS SECTION
Shown Direct to Masonry
Outswing only w/ 4-9/16" jamb

3/8 HORIZONTAL CROSS SECTION
Shown Direct to Masonry
Outswing only w/ 4-9/16" jamb

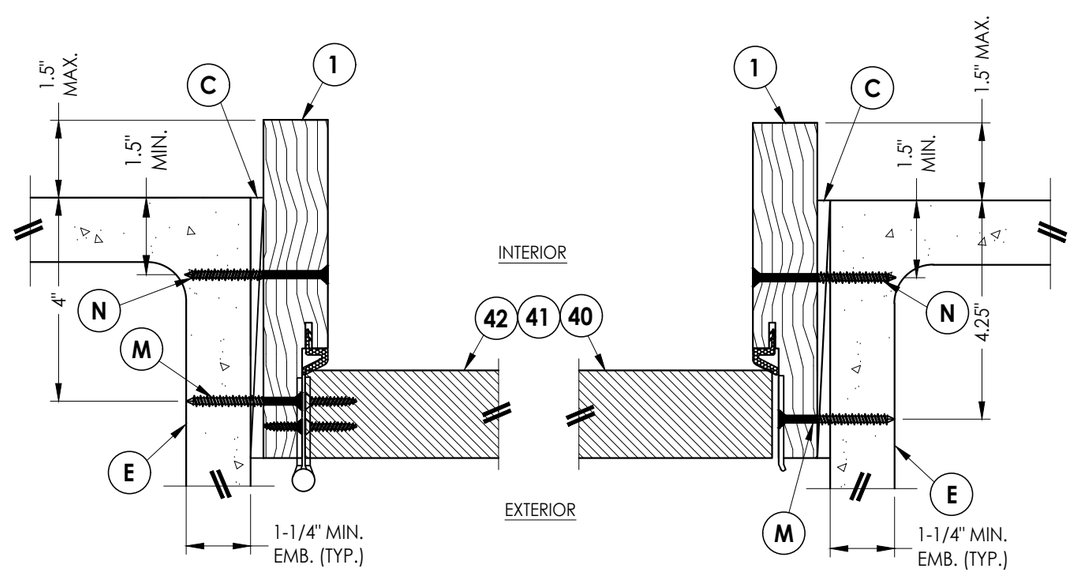

5/8 HORIZONTAL CROSS SECTION
Shown Direct to Masonry
Outswing only w/ 6-9/16" jamb

6/8 HORIZONTAL CROSS SECTION
Shown Direct to Masonry
Outswing only w/ 6-9/16" jamb

Documents Prepared By:
Lyndon F. Schmidt
P.E. No. 43409

RW BUILDING CONSULTANTS, INC.
P.O. Box 230, Valrico, FL 33595
Phone No.: 813.659.9197
FBPE Registry No. 9813

PRODUCT: *THERMA–TRU FIBERGLASS DOOR*

PART OR ASSEMBLY: *HORIZONTAL & VERTICAL SECTIONS (DIRECT TO MASONRY)*

NO.	DATE	REVISIONS	BY
2	8/22/23	UPDATE TO 8TH ED. (2023) FBC	LFS
1	8/05/20	UPDATE TO 7th ED (2020) FBC	LFS

DATE: 3/24/20
SCALE: N.T.S.
DWG. BY: RW
CHK. BY: LFS
DRAWING NO.: FL–23955.19
SHEET 8 OF 12

© 2020 R.W. BUILDING CONSULTANTS INC.

Z:\2023 FBC Drawings\Therma-Tru\FL-23955 R3\FL-23955.19-20.dwg

Notes:
1. Sill Item #'s 13, 16, 17, 19, 20, 50, 51, 52, 53, 54 & 55 are attached to jambs w/3) #8 X 2-1/2" pfh screws at each end.
   Sill Item #'s 14 are attached to jambs w/ (2) #8 X 2-1/2" pfh screws at each end.
   Sill Item # 18 is attached to jambs utilizing (4) #10 X 1-1/2" pph screws at each end.

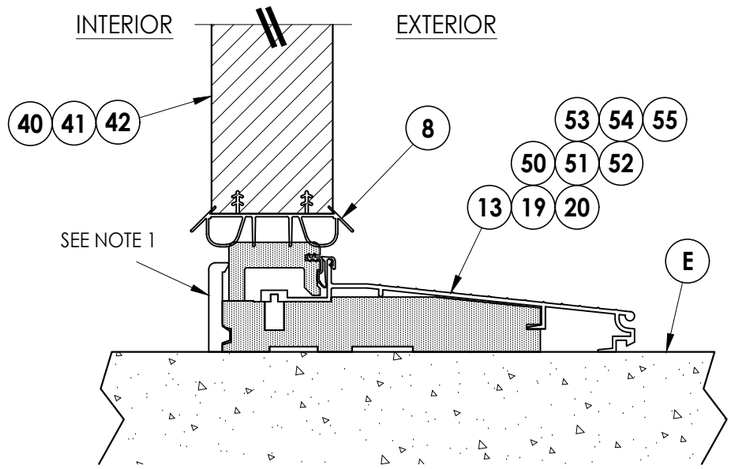

1/9 **VERTICAL CROSS SECTION**
Inswing Sill

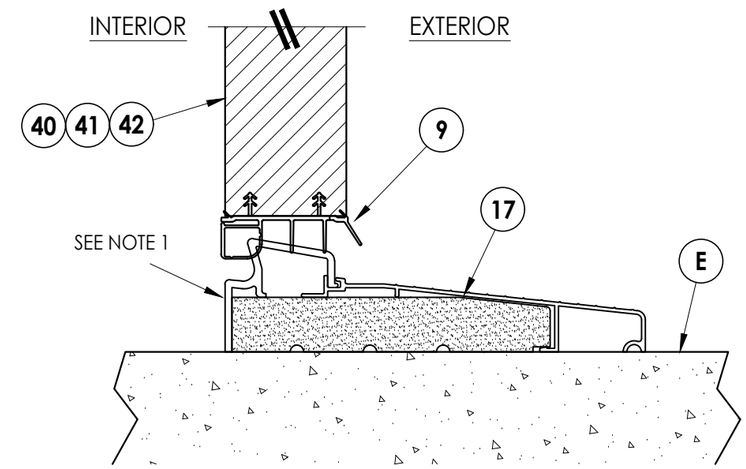

2/9 **VERTICAL CROSS SECTION**
Inswing Sill

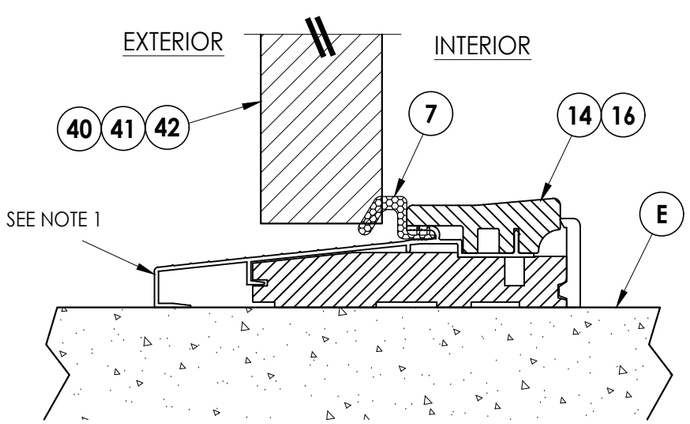

3/9 **VERTICAL CROSS SECTION**
Outswing Sill

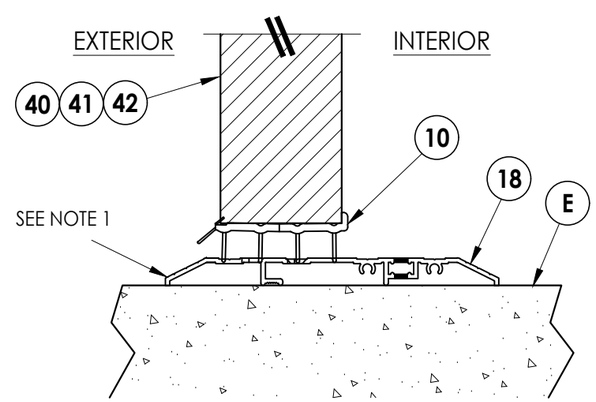

4/9 **VERTICAL CROSS SECTION**
Public Access Sill

Documents Prepared By:
Lyndon F. Schmidt
P.E. No. 43409

RW BUILDING CONSULTANTS, INC.
P.O. Box 230, Valrico, FL 33595
Phone No.: 813.659.9197
FBPE Registry No. 9813

PRODUCT: THERMA-TRU FIBERGLASS DOOR

PART OR ASSEMBLY: VERTICAL CROSS SECTIONS (THRESHOLDS)

NO.	DATE	REVISIONS	BY
2	8/22/23	UPDATE TO 8TH ED. (2023) FBC	LFS
1	8/05/20	UPDATE TO 7th ED (2020) FBC	LFS

DATE: 3/24/20
SCALE: N.T.S.
DWG. BY: RW
CHK. BY: LFS
DRAWING NO.: FL-23955.19
SHEET 9 OF 12

© 2020 R.W. BUILDING CONSULTANTS INC.

Z:\2023 FBC Drawings\Therma-Tru\FL-23955 R3\FL-23955.19-20.dwg

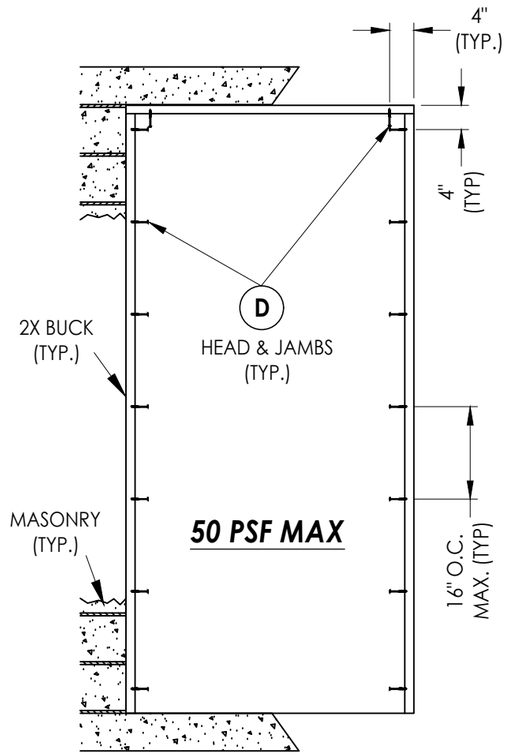

2X BUCK ANCHORING

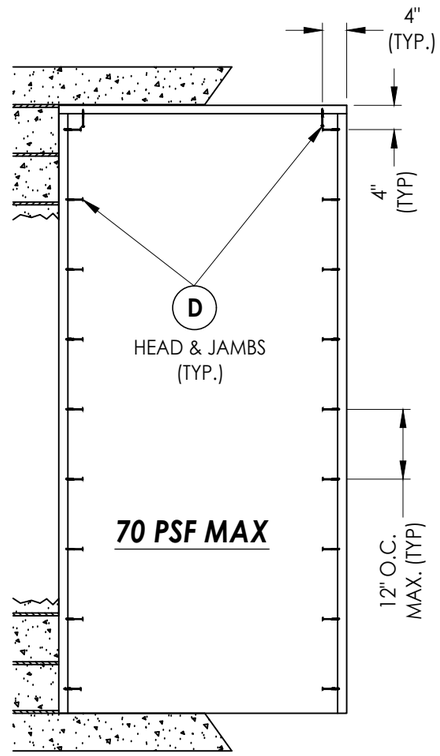

2X BUCK ANCHORING

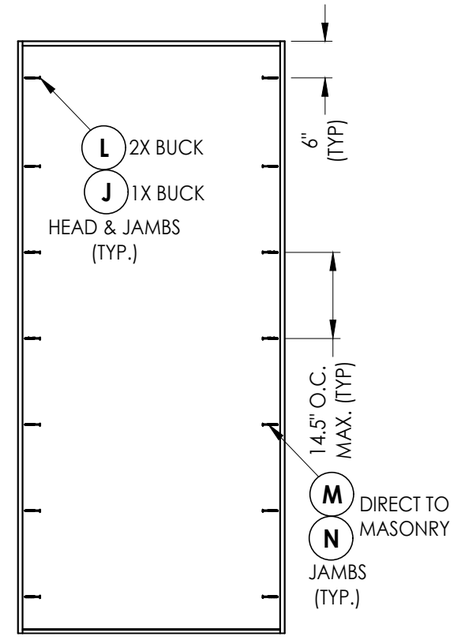

FRAME ANCHORING

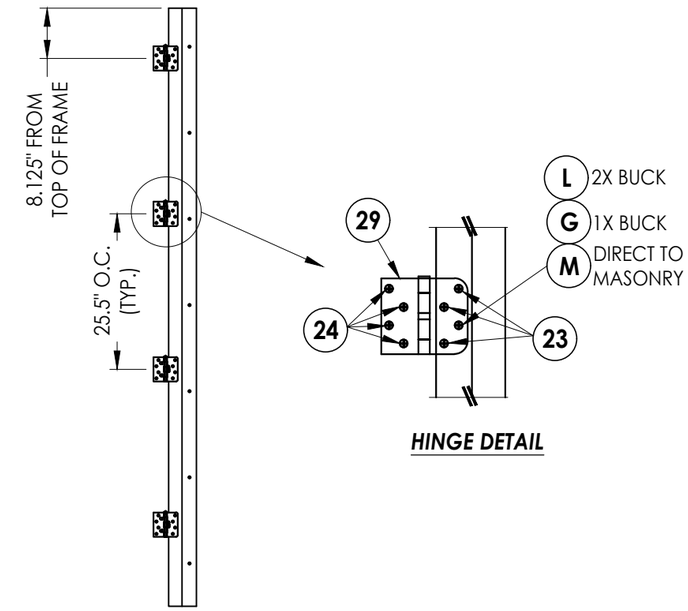

HINGE DETAIL

HINGE JAMB

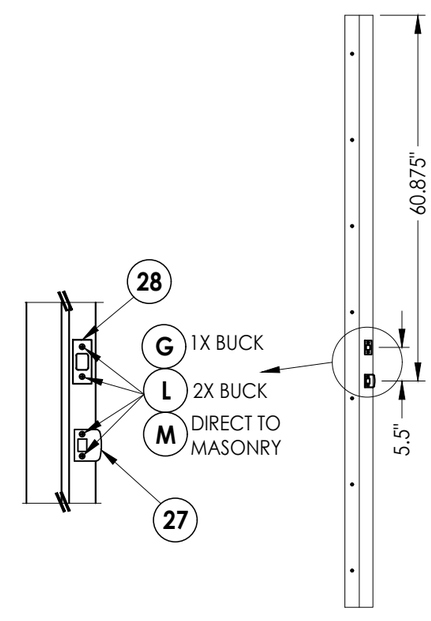

LATCH & DEADBOLT STRIKE PLATE DETAILS

CONCRETE ANCHOR NOTES:

1. *Concrete anchor locations at the corners may be adjusted to maintain the min. edge distance to mortar joints.*
2. *Concrete anchor locations noted as "MAX. ON CENTER" must be adjusted to maintain the min. edge distance to mortar joints, additional concrete anchors may be required to ensure the "MAX. ON CENTER" dimension are not exceeded.*
3. *Concrete anchor table:*

ANCHOR TYPE	ANCHOR SIZE	MIN. EMBEDMENT	MIN. CLEARANCE TO MASONRY EDGE	MIN. CLEARANCE TO ADJACENT ANCHOR
ITW TAPCON®	1/4"	1-1/4"	2"	4"
DeWALT ULTRACON®	1/4"	1-1/4"	1"	4"
ITW TAPCON®	3/16"	1-1/4"	3"	1-1/2"

WOOD SCREW INSTALLATION NOTES:

1. *Maintain a minimum 5/8" edge distance, 1" end distance, & 1" o.c. spacing of wood screws to prevent the splitting of wood.*

Documents Prepared By:
Lyndon F. Schmidt
P.E. No. 43409
RW BUILDING CONSULTANTS, INC.
P.O. Box 230, Valrico, FL 33595
Phone No.: 813.659.9197
FBPE Registry No. 9813

PRODUCT: *THERMA-TRU FIBERGLASS DOOR*

PART OR ASSEMBLY: *BUCK ANCHORING*

NO.	DATE	BY
2	8/22/23	LFS
1	8/05/20	LFS

REVISIONS

UPDATE TO 8TH ED. (2023) FBC
UPDATE TO 7th ED (2020) FBC

DATE: 3/24/20
SCALE: N.T.S.
DWG. BY: RW
CHK. BY: LFS
DRAWING NO.: FL-23955.19
SHEET 10 OF 12

© 2020 R.W. BUILDING CONSULTANTS INC.

Z:\2023 FBC Drawings\Therma-Tru\FL-23955 R3\FL-23955.19-20.dwg

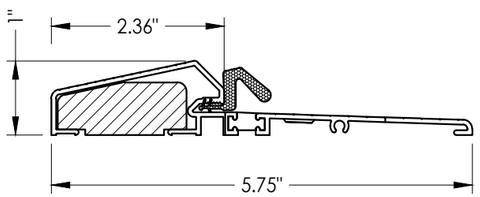

14 ***OUTSWING THRESHOLD***

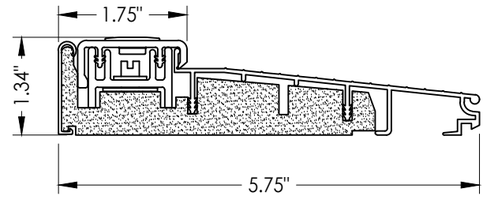

13 ***INSWING THRESHOLD***
Adjustable

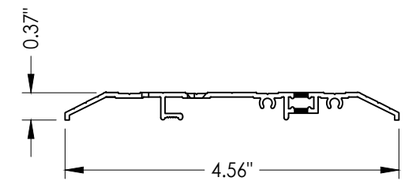

18 ***PUBLIC ACCESS THRESHOLD***

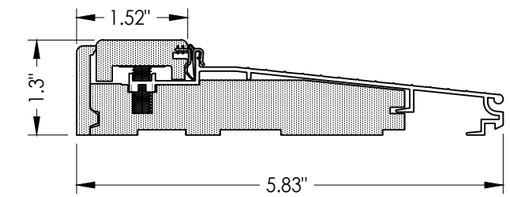

19 ***INSWING THRESHOLD***
Adjustable

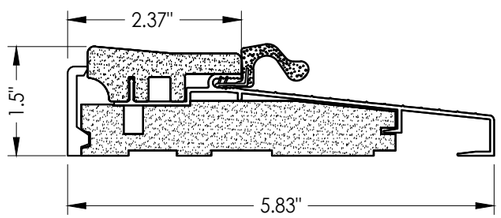

16 ***OUTSWING THRESHOLD***

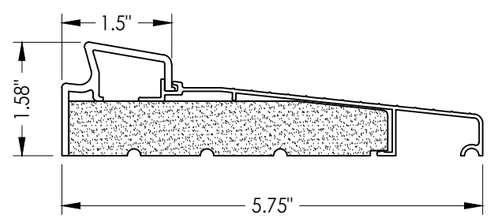

17 ***INSWING THRESHOLD***
Basic Fixed

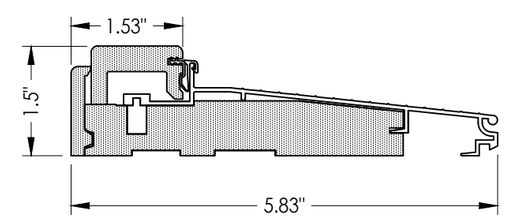

20 ***INSWING THRESHOLD***
Adjustable

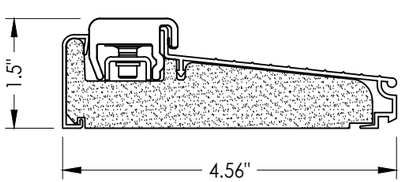

50 ***INSWING THRESHOLD***
Inswing Composite Adjustable Sill
Book, Hybrid

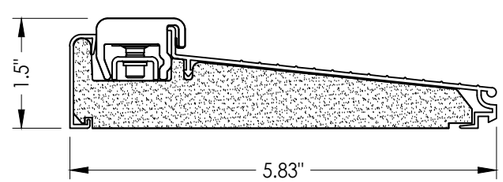

51 ***INSWING THRESHOLD***
Inswing Composite Adjustable Sill
Book, Hybrid

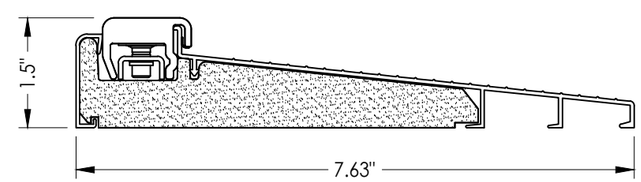

52 ***INSWING THRESHOLD***
Inswing Composite Adjustable Sill
Book, Hybrid

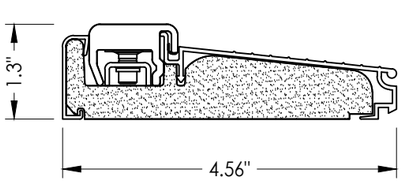

53 ***INSWING THRESHOLD***
Inswing Composite Adjustable Sill
U1

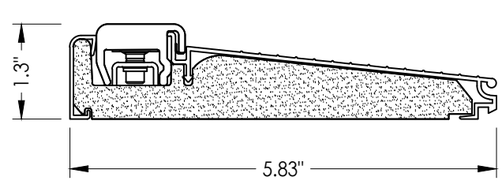

54 ***INSWING THRESHOLD***
Inswing Composite Adjustable Sill
U1

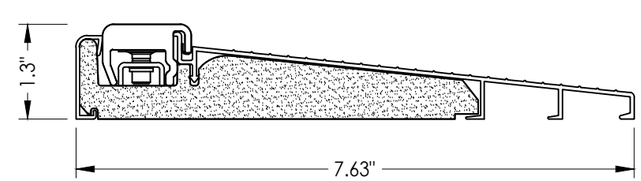

55 ***INSWING THRESHOLD***
Inswing Composite Adjustable Sill
U1

Documents Prepared By:
Lyndon F. Schmidt
P.E. No. 43409
RW BUILDING CONSULTANTS, INC.
P.O. Box 230, Valrico, FL 33595
Phone No.: 813.659.9197
FBPE Registry No. 9813

PRODUCT: *THERMA-TRU FIBERGLASS DOOR*

PART OR ASSEMBLY: *COMPONENTS*

REVISIONS

NO.	DATE	BY
2	8/22/23 UPDATE TO 8TH ED. (2023) FBC	LFS
1	8/05/20 UPDATE TO 7th ED (2020) FBC	LFS

DATE: 3/24/20
SCALE: N.T.S.
DWG. BY: RW
CHK. BY: LFS
DRAWING NO.: FL-23955.19
SHEET 11 OF 12

© 2020 R.W. BUILDING CONSULTANTS INC.

Z:\2023 FBC Drawings\Therma-Tru\FL-23955 R3\FL-23955.19-20.dwg

BILL OF MATERIALS

ITEM #	DESCRIPTION	MATERIAL
A	1X BUCK (SG >= 0.42)	WOOD
B	2X BUCK (SG >= 0.42)	WOOD
C	1/4" MAX. SHIM SPACE	-
D	1/4" X 2-3/4" PFH DeWALT OR ITW CONCRETE SCREW	STEEL
E	MASONRY - 3,000 PSI MIN. CONCRETE CONFORMING TO ACI 301 OR HOLLOW BLOCK CONFORMING TO ASTM C90	CONCRETE
G	3/16" X 3-1/4" PFH ITW CONCRETE SCREW	STEEL
J	1/4" X 3-3/4" PFH DeWALT OR ITW CONCRETE SCREW	STEEL
L	#10 X 2-1/2" PFH WOOD SCREW (1.15" MIN. EMBEDMENT)	STEEL
M	3/16" X 2-1/4" PFH ITW CONCRETE SCREW	STEEL
N	3/16" X 2-3/4" ITW CONCRETE SCREW	STEEL
1	JAMB (FINGER JOINT PINE)	WOOD
2	JAMB (FINGER JOINT PINE)	WOOD
7	WEATHERSTRIP	FOAM
8	SWEEP	VINYL
9	SWEEP	VINYL
10	SWEEP (USE w/ PUBLIC ACCESS THRESHOLD)	VINYL
13	INSWING THRESHOLD	ALUM/COMP
14	OUTSWING THRESHOLD	ALUM/COMP
16	OUTSWING THRESHOLD	ALUM/COMP
17	INSWING THRESHOLD	ALUM/COMP
18	PUBLIC ACCESS THRESHOLD	ALUM
19	INSWING THRESHOLD	ALUM/COMP
20	INSWING THRESHOLD	ALUM/COMP
23	#10 X 3/4" PFH WOOD SCREW	STEEL
24	#10 X 1" PFH WOOD SCREW	STEEL
25	#8 X 2-1/2" PFH WOOD SCREW	STEEL
27	LATCH STRIKE PLATE	STEEL
28	DEADBOLT STRIKE PLATE	STEEL
29	4" X 4" HINGE	STEEL

BILL OF MATERIALS

ITEM #	DESCRIPTION	MATERIAL
40	DOOR PANEL (BOOK DOOR)	-
41	DOOR PANEL (HYBRID DOOR)	-
42	DOOR PANEL (U1 DOOR)	-
50	INSWING THRESHOLD	ALUM/COMP
51	INSWING THRESHOLD	ALUM/COMP
52	INSWING THRESHOLD	ALUM/COMP
53	INSWING THRESHOLD	ALUM/COMP
54	INSWING THRESHOLD	ALUM/COMP
55	INSWING THRESHOLD	ALUM/COMP

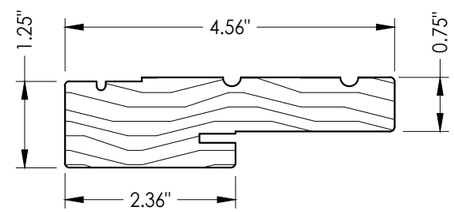

1 WOOD JAMB

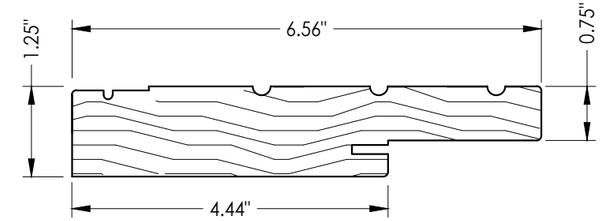

2 WOOD JAMB

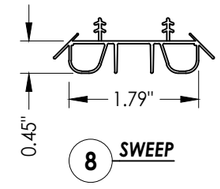

8 SWEEP

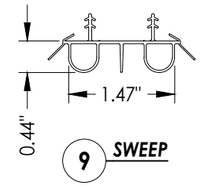

9 SWEEP

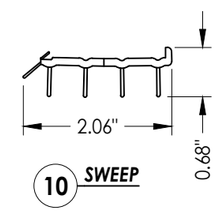

10 SWEEP

CONCRETE ANCHOR NOTES:

1. *Concrete anchor locations at the corners may be adjusted to maintain the min. edge distance to mortar joints.*
2. *Concrete anchor locations noted as "MAX. ON CENTER" must be adjusted to maintain the min. edge distance to mortar joints, additional concrete anchors may be required to ensure the "MAX. ON CENTER" dimension are not exceeded.*
3. *Concrete anchor table:*

ANCHOR TYPE	ANCHOR SIZE	MIN. EMBEDMENT	MIN. CLEARANCE TO MASONRY EDGE	MIN. CLEARANCE TO ADJACENT ANCHOR
ITW TAPCON®	1/4"	1-1/4"	2"	4"
DeWALT ULTRACON+®	1/4"	1-1/4"	1"	4"
ITW TAPCON®	3/16"	1-1/4"	3"	1-1/2"

WOOD SCREW INSTALLATION NOTES:

1. *Maintain a minimum 5/8" edge distance, 1" end distance, & 1" o.c. spacing of wood screws to prevent the splitting of wood.*

Documents Prepared By:
Lyndon F. Schmidt
P.E. No. 43409

RW BUILDING CONSULTANTS, INC.
P.O. Box 230, Valrico, FL 33595
Phone No.: 813.659.9197
FBPE Registry No. 9813

PRODUCT: THERMA-TRU FIBERGLASS DOOR

PART OR ASSEMBLY: COMPONENTS & BILL OF MATERIALS

REVISIONS

NO.	DATE		BY
2	8/22/23	UPDATE TO 8TH ED. (2023) FBC	LFS
1	8/05/20	UPDATE TO 7th ED (2020) FBC	LFS

DATE: 3/24/20
SCALE: N.T.S.
DWG. BY: RW
CHK. BY: LFS
DRAWING NO.: FL-23955.19
SHEET 12 OF 12

© 2020 R.W. BUILDING CONSULTANTS INC.

Z:\2023 FBC Drawings\Therma-Tru\FL-23955 R3\FL-23955.19-20.dwg